A1061–G SINGLE PHASE AC SCHEMATIC

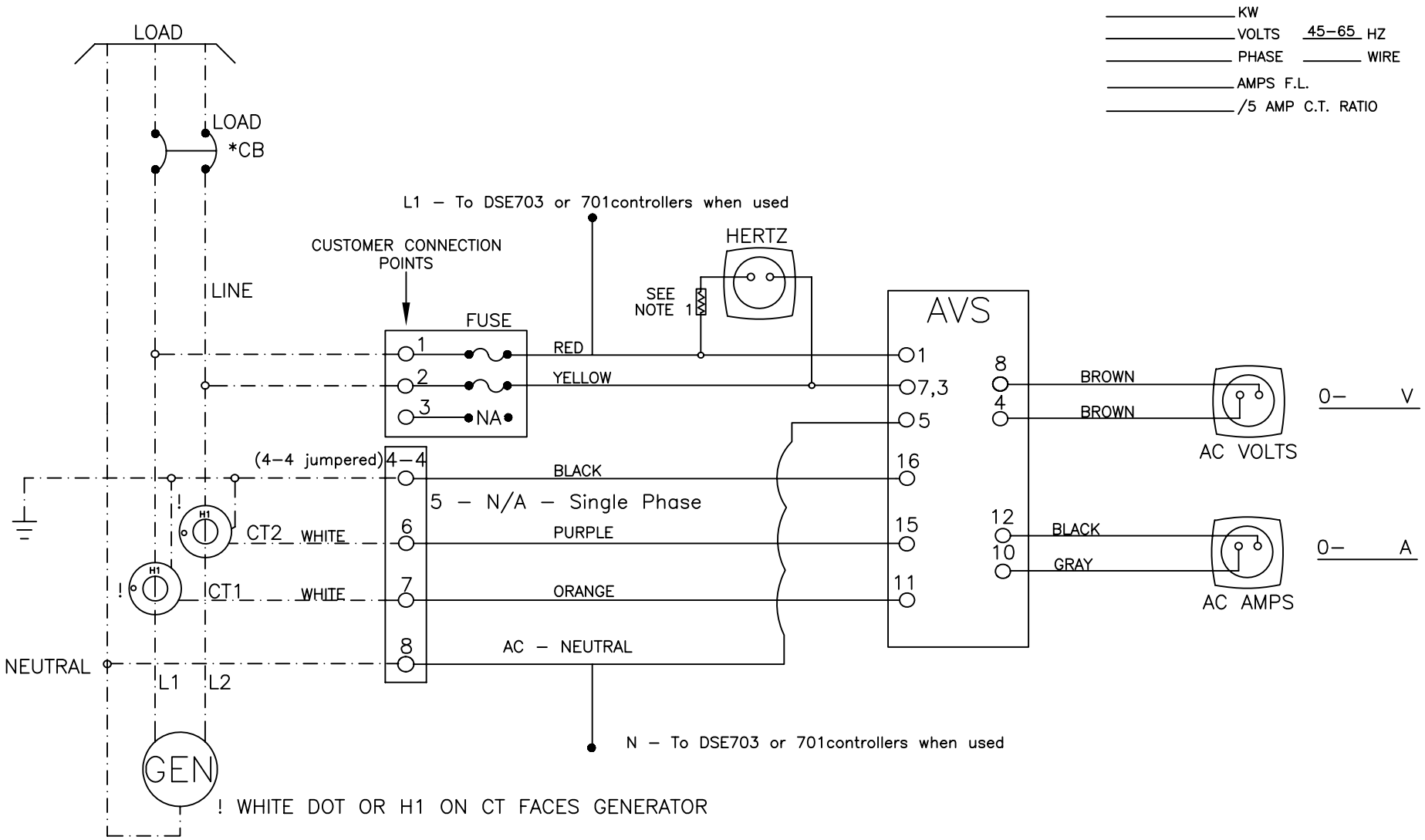

= WIRED BY PANELSOURCE = WIRED BY CUSTOMER O = PANEL TERMINAL POINT	NOTE1: RESISTOR PRE–WIRED FOR PANELS WITH NOMINAL VOLTAGE ABOVE 240V. * = FURNISHED BY CUSTOMER	UNLESS OTHERWISE SPECIFIED: ALL WIRES 16GA SCALE: NOT TO SCALE	Panelsource Engine & Generator Controls	TITLE: STANDARD SINGLE PHASE DRAWING NUMBER: A1061–G	ORIG. DATE: 26–FEB–014 DRAWN BY: TE REVISION: REV2.0	LAST REV. DATE: 26–FEB–014 SHEET 1 OF 1